Current part is item (12) on diagram. Available at www.oshkoshequipment.com

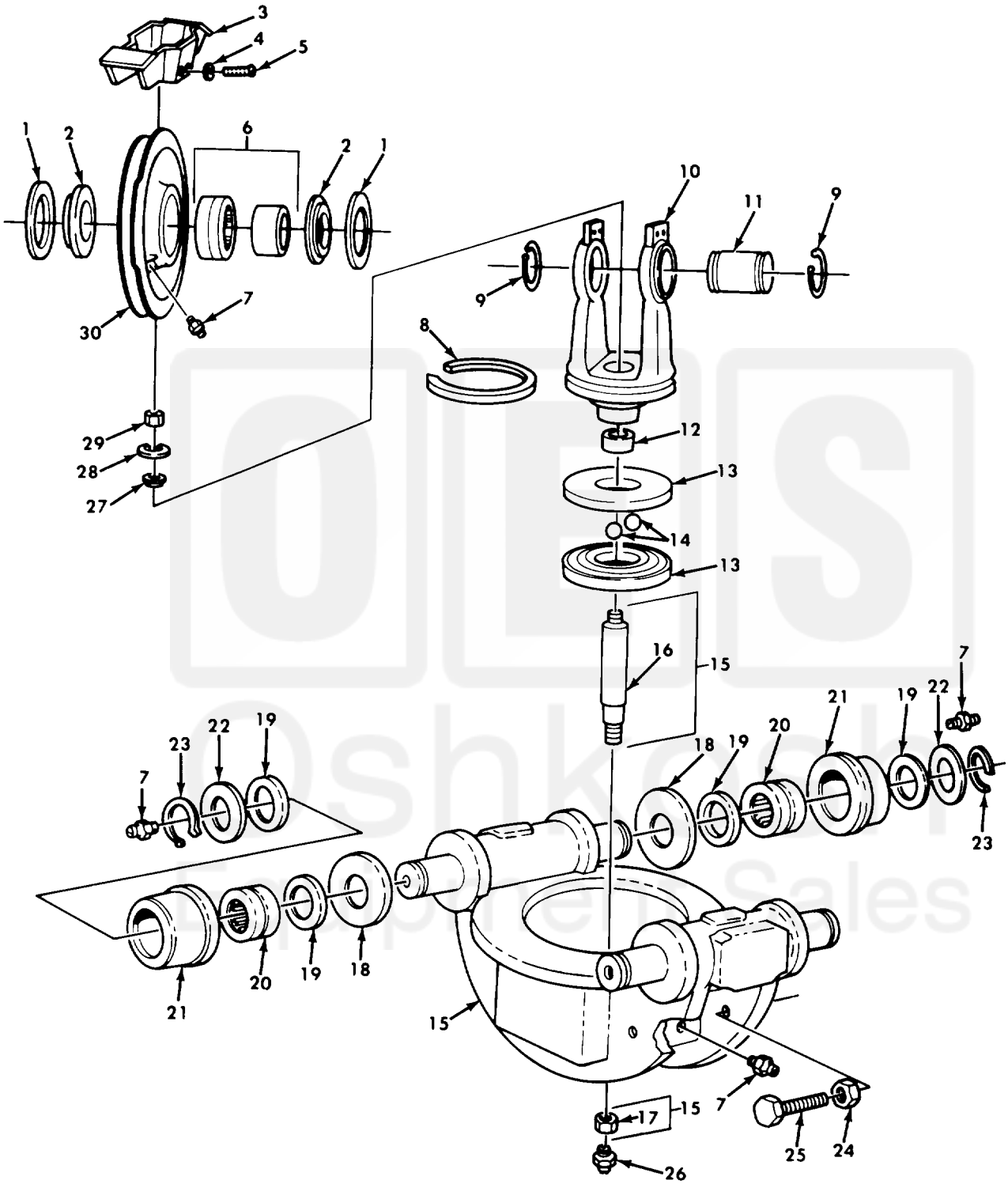

Figure 383. Wrecker Rear Winch Sheave Swivel and Trolley Assembly.

Current part is item (12) on diagram. Available at www.oshkoshequipment.com

Current part is item (12) on diagram. Available at www.oshkoshequipment.com

(1) ITEM NO	(2) SMR CODE	(3) CAGEC	(4) PART NUMBER	(5) DESCRIPTION AND USABLE ON CODES(UOC)	(6) QTY
				GROUP 2001 HOIST,CRANE,CR WINCH ASSEMBLY	
				FIG.383 WRECKER REAR WINCH SPEAVE SWIVEL AND TROLLEY ASSEMBLY	
1	PAFZZ	19207	7409953	BEARING,WASHER,THRU UOC:622	2
2	PAFZZ	19207	7954539-1	WASHER,SHOULDERED UOC:622	2
3	PAFZZ	19207	7409893	GUARD,MECHANICAL DR GROOVE PULLEY UOC:622	1
4	PAFZZ	96906	MS35338-46	WASHER,LOCK UOC:622	4
5	PAFZZ	96906	MS90727-58	SCREW,CAP,HEXAGON H UOC:622	4
6	PAFZZ	96906	MS500072-33	BEARING,ROLLER,NEED UOC:622	1
7	PAOZZ	96906	MS15003-1	FITTING,LUBRICATION UOC:622	7
8	PAFZZ	19207	7409889	FELT,MECHANICAL,PRE UOC:622	1
9	PAFZZ	96906	MS16624-3275	RING,RETAINING UOC:622	2
10	PAFZZ	19207	7409892	FRAME SWIVEL SHEAVE TROLLEY ASSEMBLY FRAME UOC:622	1
11	PAFZZ	19207	8690893	SHAFT,STRAIGHT UOC:622	1
12	PAFZZ	96906	MS51961-6	BEARING,ROLLER,NEED UOC:622	1
13	PAFZZ	19207	7409896	RING,BEARING,INNER FRAME SWIVEL SHEAVE UOC:622	2
14	PAFZZ	96906	MS19059-2424	BALL,BEARING UOC:622	45
15	PBFZZ	19207	8690894	FRAME ASSY,TROLLY WINCH UOC:622	1
16	PBFZZ	19207	7409950	SHAFT,SHOULDERED UOC:622	1
17	PAFZZ	96906	MS51943-16	NUT,SELF-LOCKING,HE UOC:622	1
18	PAFZZ	19207	7409958	BEARING,WASHER,THRU UOC:622	4
19	PAFZZ	19207	7409959	FELT,MECHANICAL,PRE UOC:622	8
20	PAFZZ	96906	MS51961-30	BEARING,ROLLER,NEED UOC:622	4
21	PAFZZ	19207	7409960	BEARING,SLEEVE UOC:622	4
22	PAFZZ	19207	7409962	WASHER,FLAT UOC:622	4

Current part is item (12) on diagram. Available at www.oshkoshequipment.com

Current part is item (12) on diagram. Available at www.oshkoshequipment.com

(1) ITEM NO	(2) SMR CODE	(3) CAGEC	(4) PART NUMBER	(5) DESCRIPTION AND USABLE ON CODES(UOC)	(6) QTY
23	PAFZZ	96906	MS16624-1200	RING,RETAINING UOC:622	4
24	PAFZZ	96906	MS35691-33	NUT,PLAIN,HEXAGON UOC:622	4
25	PAFZZ	21450	113038	SCREW,CAP,SOCKET HE UOC:622	4
26	PAFZZ	96906	MS15003-6	FITTING,LUBRICATION UOC:622	1
27	PAFZZ	19207	7409956	WASHER,FLAT UOC:622	1
28	PAFZZ	19207	7409955	WASHER,FLAT UOC:622	1
29	PAFZZ	96906	MS21245-L8	NUT,SELF-LOOKING,HE UOC:622	1
30	PAFZZ	19207	7409952	PULLEY,GROOVE UOC:622	1

END OF FIGURE

Current part is item (12) on diagram. Available at www.oshkoshequipment.com